MERCURIO

Our experience

Your key to success

KEESTRACK

MOBILE CRUSHING AND SCREENING EQUIPMENT

KEESTRACK
MOBILE CRUSHING AND SCREENING EQUIPMENT

Applications

- Medium and hard stone quarry
- Concrete and landfill recycling
- Construction waste
- Demolition
- Gravel
- Road construction

Features and benefits

- Optimum flexibility and mobility with the highest possible performance
- Low cost solution that offers superior crushing and screening results
- Free standing machine without supportlegs
- Robust design with reasonable machine weight
- Full hydraulic adjustment during working
- Automatic feeding system
- Compact transport dimensions
- Low feeding height
- Quick set-up time
- Proven reliability

KEESTRACK
MOBILE CRUSHING AND SCREENING EQUIPMENT
OIL
DIESEL
MERCURIO
Our experience
Your key to success

TECHNICAL SPECIFICATIONS:

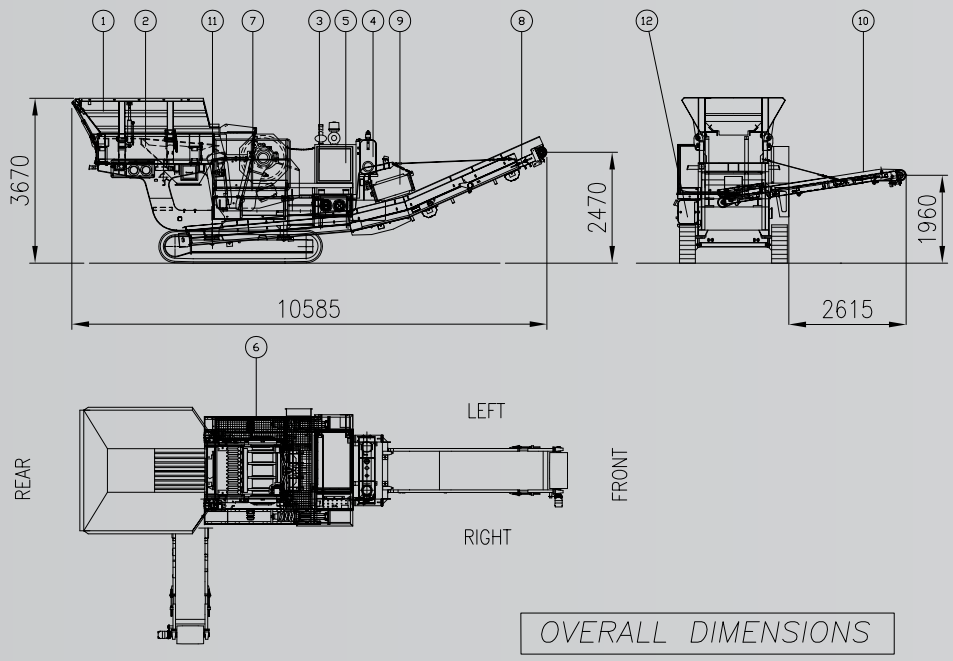

OVERALL DIMENSIONS

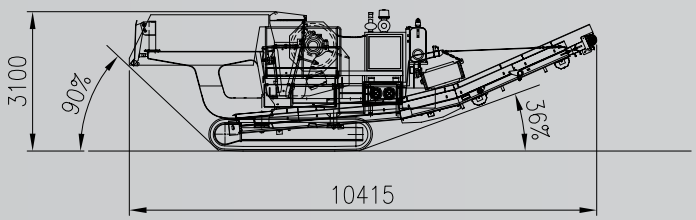

12	Diesel Tank
11	Crawlers
10	Side belt conveyor
9	Magnetic separator
8	Main belt conveyor
7	Jaw crusher
6	Control panel
5	Engine unit
4	Oil tan
3	Hydraulic box
2	Vibrating feeder
1	Loading hopper

TRANSPORT DIMENSIONS

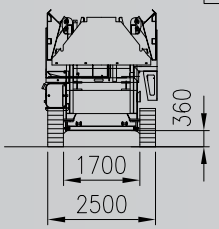

Transport height : 3100mm
Transport width : 2500mm
Transport weight : appr. 19.9 ton

Pos.1) Feed Hopper
-Capacity : ca.4 m³
-Loading height : 3670mm

Pos.2) Feeding
-Vibrating pan feeder grizzly :700 x 2600mm

Pos.3) Jaw Crusher
-Model : FP075
-Feeding opening :735 x 500mm
-Weight :6.1 ton
-Standard outlet adjustment
C.S.S. min-max :20-80 mm
- Over range configuration
C.S.S. min-max :45-130 mm

Pos.4) Main output conveyor
-Length : 8500mm
-Width : 800mm
-Discharge height : 2470mm

Pos.5) Track-unit
-Longitudinal centers : 2920mm
-Width of the tracks : 400mm

All dimensions are approximate

MERCURIO

OPTIONS LIST

1. Overband magnet
2. Radio remote control Level 1
3. Radio remote control Level 2
4. Diesel fill pump
5. Water pump for dust suppression
6. Pump for VV1023 screening unit
7. Automatic greasing system
8. Side belt conveyor

1

2

3

4

5

6

8

7

Powered by:

JOHN DEERE

Power: 86 KW

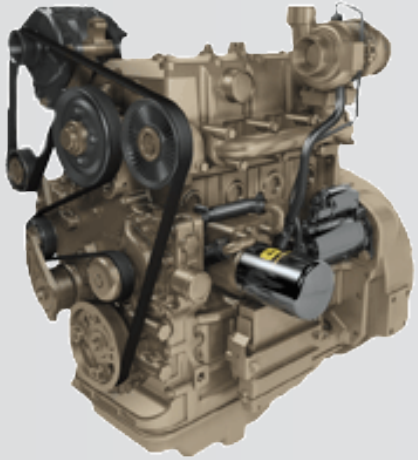

Our Experience
Your key to success

The material in this document is for information only and is subject to change without notice. Keestrack N.V. assumes no liability resulting from errors or omissions in this document, or from the use of the information contained herein.

Les renseignements contenus dans ce document ne sont fournis qu'à titre d'information uniquement et peuvent être modifiés sans avis préalable. Keestrack N.V. décline toute responsabilité résultant d'erreurs ou d'omissions dans ce document, ou de l'utilisation des renseignements y figurant.

Materialet i dette dokumentet er kun til informasjon og kan endres uten varsel. Keestrack NV påtar seg ikke ansvar som følge av feil eller utelatelser i dette dokumentet, eller fra bruk av informasjonen i dette dokumentet.

Der inhalt dieses Dokuments ist nur zur information bestimmt und kann ohne vorherige Bekanntgabe gëandert werden. Keestrack N.V übernimmt für Fehler oder Auslassungen oder für die Anwendung der enthaltenen informationen keine Haftung.

Il materiale contenuto in questo depliant è solamente a titolo informativo e può essere cambiato seriza alcun preavviso. Keestrack N.V. non assume responsabilità per eventuali errori od omissioni o per l'uso delle informazioni contenute.

De gegevens in dit document zijn alleen ter informatie bedoeld en kunnen ten alle tijde zonder verwittiging veranderd worden. Keestrack N.V. is niet verantwoordelijk voor eventuele drukfouten, onvolledigheden of voor het gebruik van de informatie in deze folder.

Head office:
Keestrack nv
Taunusweg 2
3740 Bilzen - Belgium
Tel: +32 89 51 58 51
info@keestrack.net
marketing@keestrack.net
www.keestrack.com

OMTRACK spa
Via Postumia 62
31050 Ponzano
Veneto/Treviso
Italy
Tel: +39 0422 44 13 11
omtrack@omtrack.it
www.omtrack.it

KEESTRACK
MOBILE CRUSHING AND SCREENING EQUIPMENT

OMTRACK